Getting Started Guide for Labada Box & Plant

18th February 2016
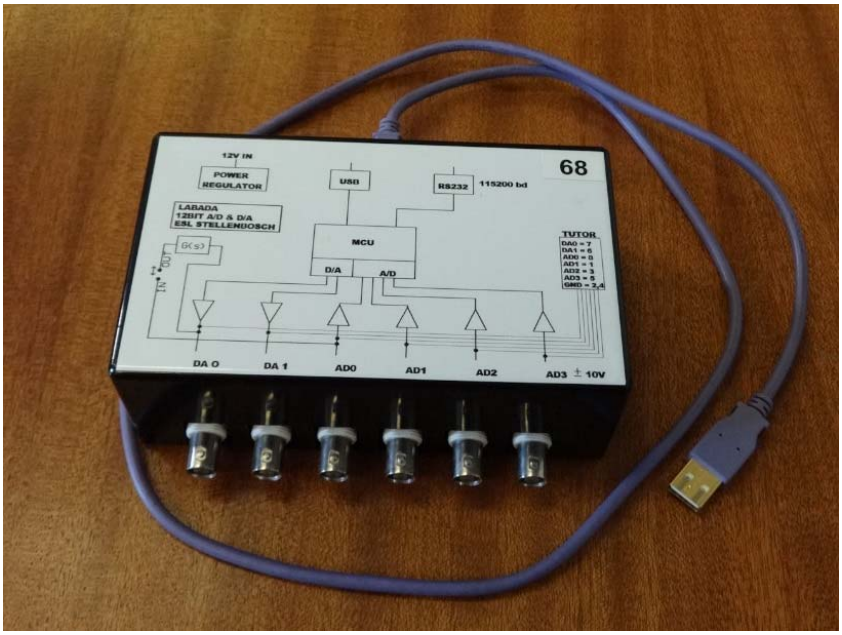
1. Obtain and sign for a Labada Box and USB cable from the Elka Lab store (Ashley).
2. Connect the USB cable from the Labada Box to the Top USB plug on the PC front.
3. Wait for the USB FTDI driver to install (if not already installed, approx 1 minute to complete).
4. Open the “Control Panel” and select the “Device Manager”.
5. Expand “Ports (COM & LPT)” and select the “USB Serial Port (COMXX)”, XX = 13-33 typically.
6. Double left click this USB tab and left click “Port Settings” and select “Bits per second” as 115200.
7. Left click “Advanced”, select “COM Port Number” and change to **COM2** (ignore any COM port already in use message).
8. Open the “Latency Timer (ms)” tab and select **1 ms** (default will be 16 ms). Close this window and **OK** the USB Serial Port properties window.
9. Copy all the Simulink models (*.mdl) files from the Control Systems 414 Sunlearn web site into the MATLAB work directory under the My Documents folder on the PC.
10. Open Matlab R2013b and load your SimuLink model (e.g. *Plant_step_ID_2013b.mdl*).
11. When it is loaded open the “*Labada Plant Model”* block, open the “*Stream Output”* block, if it tells you Serial Port 2 is not installed, let it do the setup, click “Apply” then “OK” and select the main/root SimuLink diagram tab and then run the simulation.
12. If you still get a simulation error or the Labada Plant output signal in the SimuLink “*Scope*” block stays at zero, call the lecturer or demi to assist.
13. Enjoy the Real Time simulation experience !